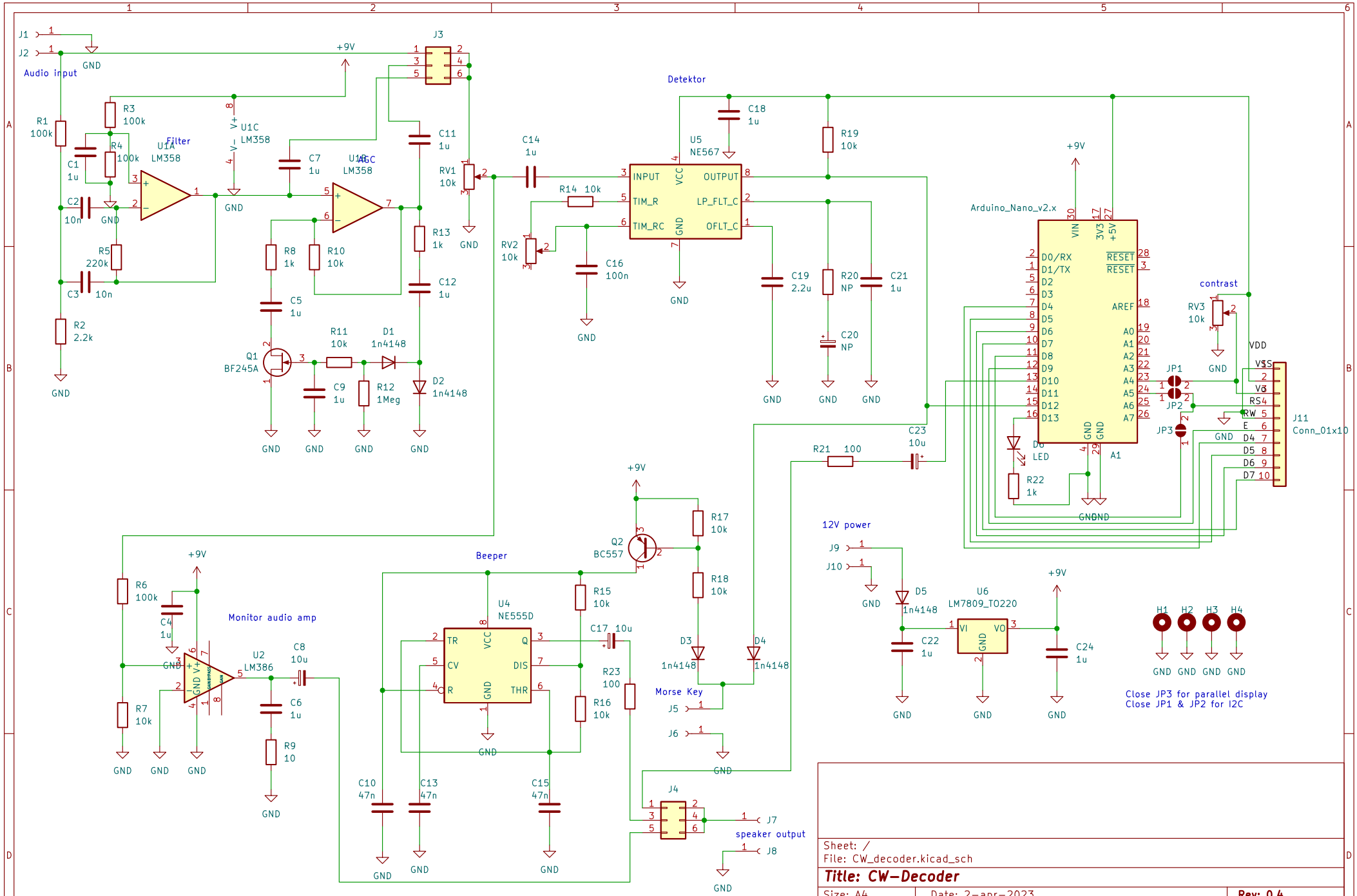

Sheet: /
File: CW_decoder.kicad_sch

Title: CW-Decoder

Size: A4	Date: 2-apr-2023	Rev: 0.4
KiCad E.D.A. kicad 6.0.5-2.fc34		Id: 1/1